RD_T23_INDUS

Schematic Revision 1.1

Title	Page
COVER	1
SYSTEM-ARCHITECTURE	2
POWER-SUPPLY_BAT_USB	3
POWER-SUPPLY	4
T23-IO_CLK_FLASH_GAS-GAUGE	5
T23-Filter-Capacitor	6
SD_AUDIO	7
WIFI_Module	8
SENSOR_IRLED	9
PIR	10
UART_BOOT_LDR_RTC_KEY_LED	11
REVISION-HISTORY	12

ARCHITECTURE

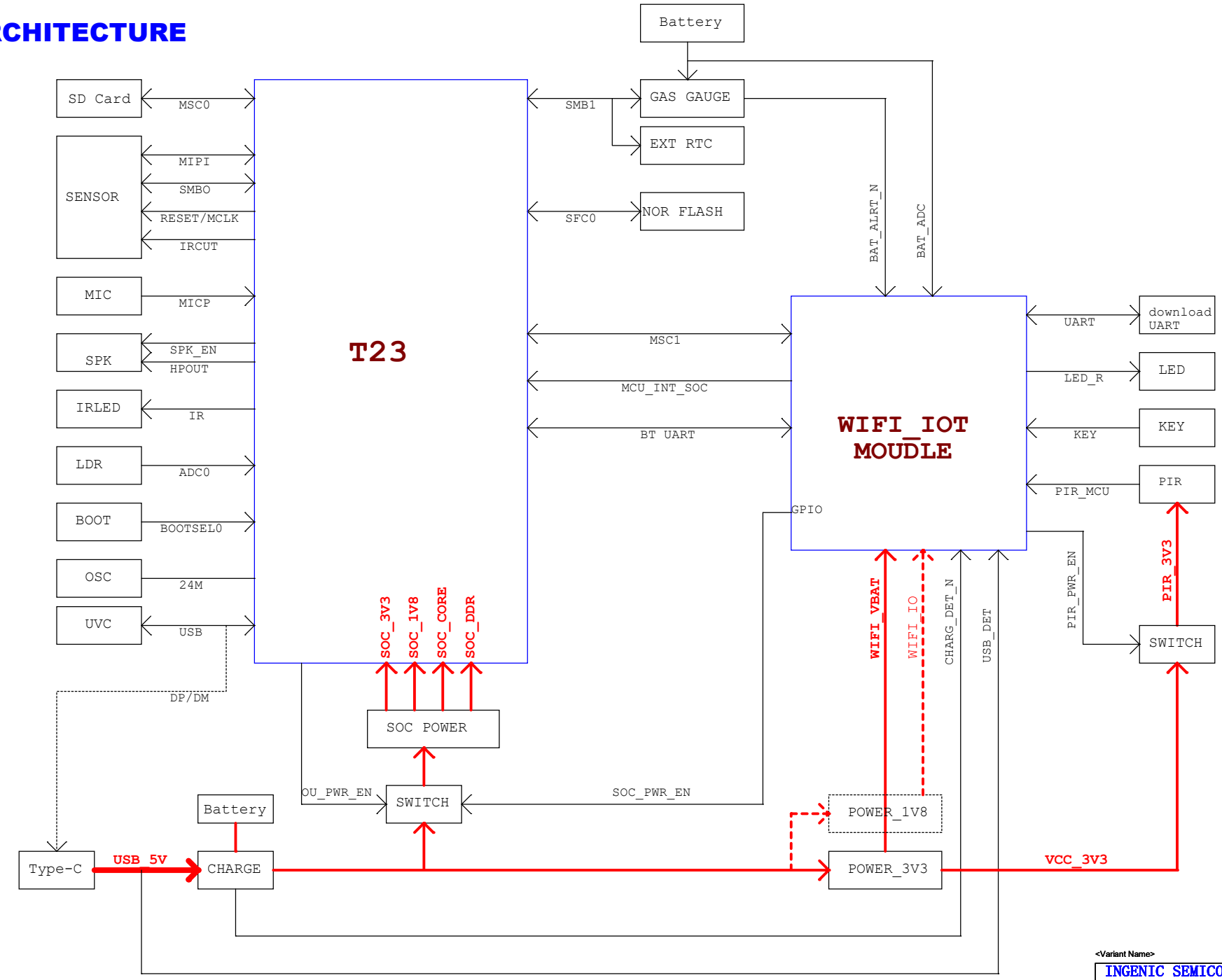

<Variant Name>

INGENIC SEMICONDUCTOR CO.,LTD		
Title: RD_T23_INDUS		
Size: A3	Page Name: PAGE02_SYSTEM-ARCHITECTURE	Rev: V1.1
Date: Monday, March 18, 2024	Sheet 2 of 12	

POWER-SUPPLY_BAT_USB

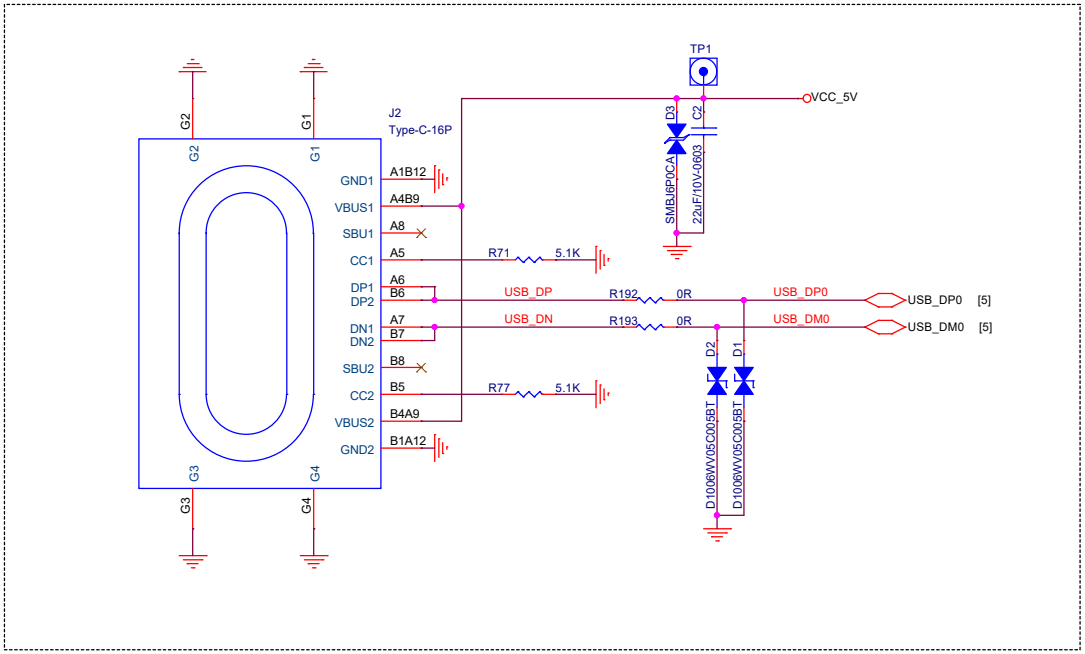

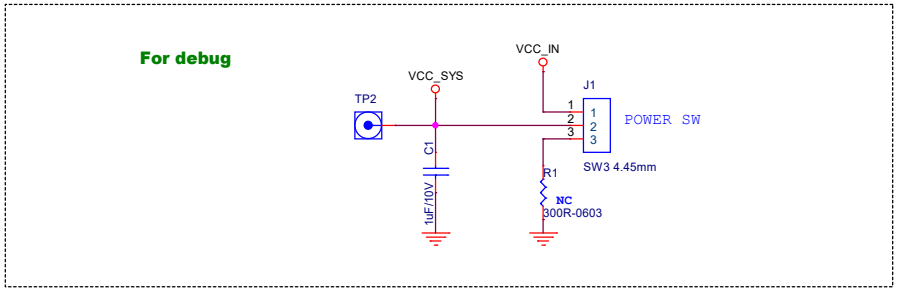

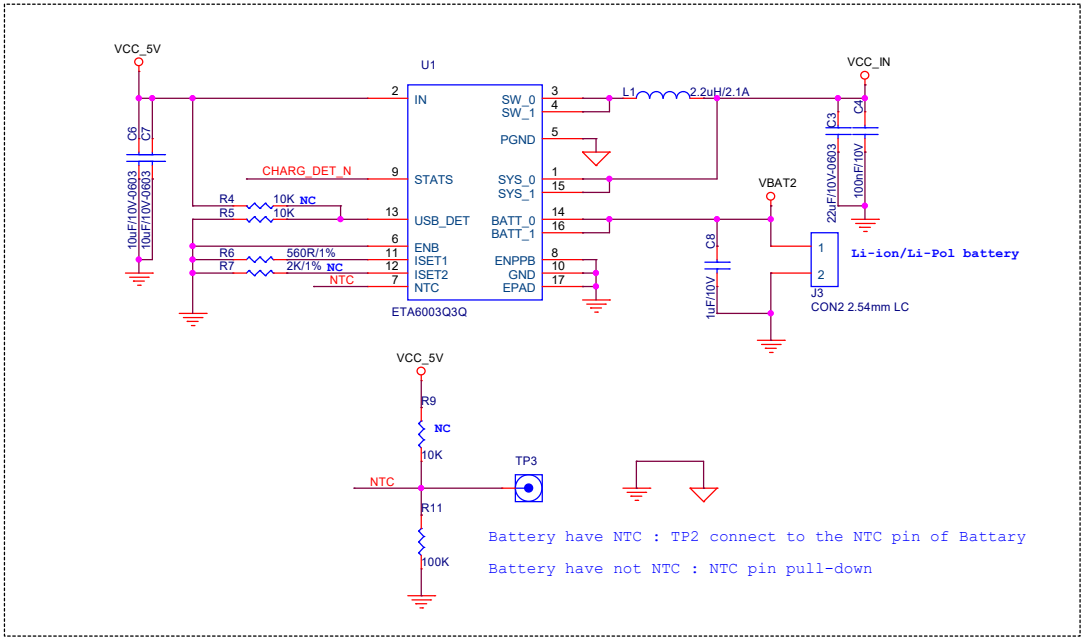

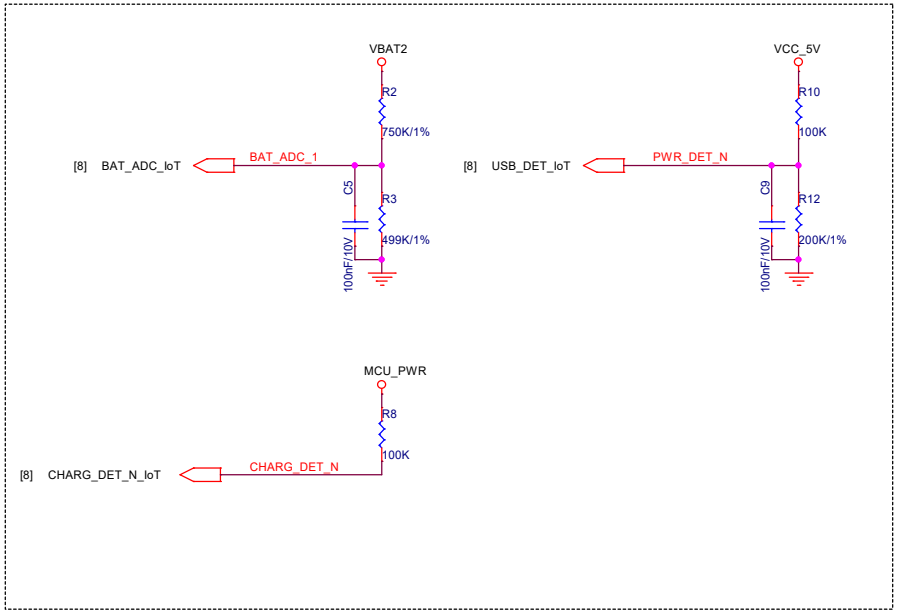

<Variant Name>

INGENIC SEMICONDUCTOR CO.,LTD		
Title: RD_T23_INDUS		
Size: A3	Page Name: PAGE03_POWER-SUPPLY_BAT_USB	Rev: V1.1
Date: Monday, March 18, 2024	Sheet 3 of 12	

POWER-SUPPLY

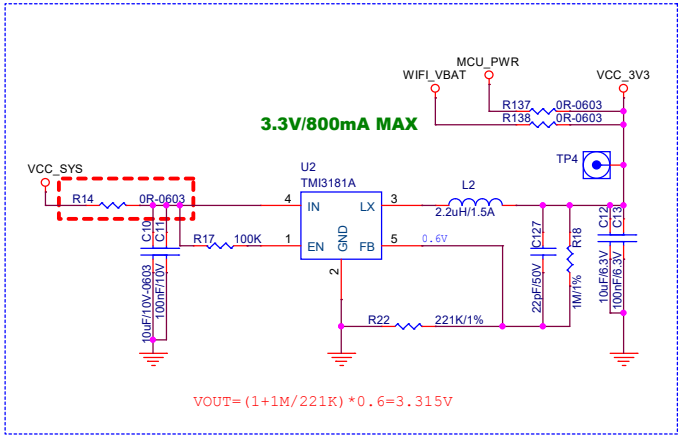

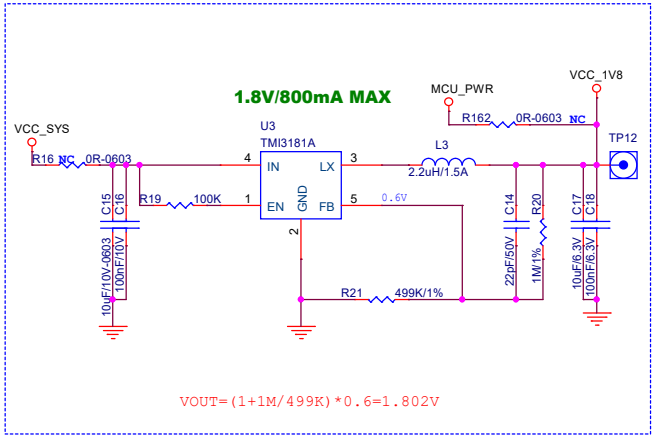

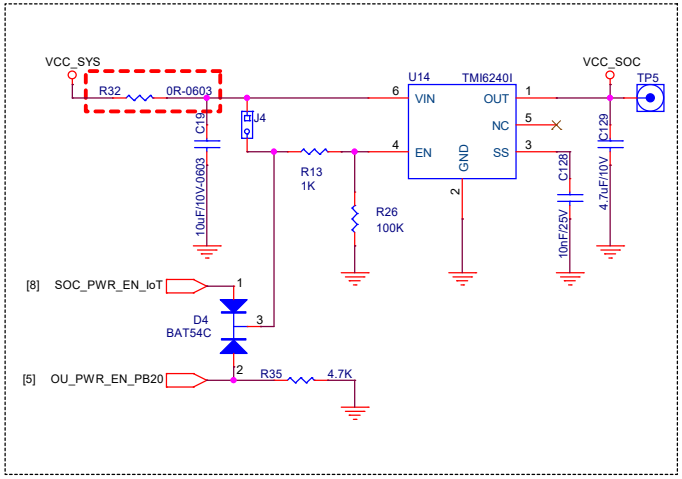

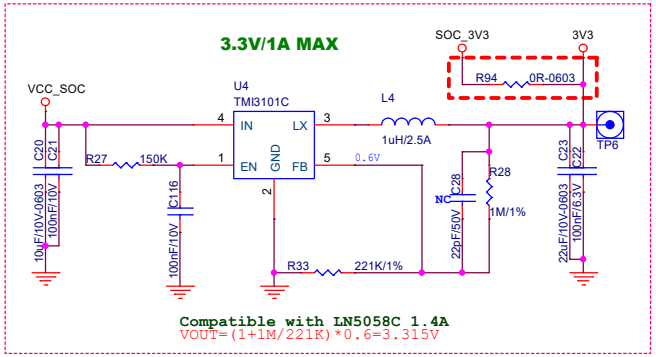

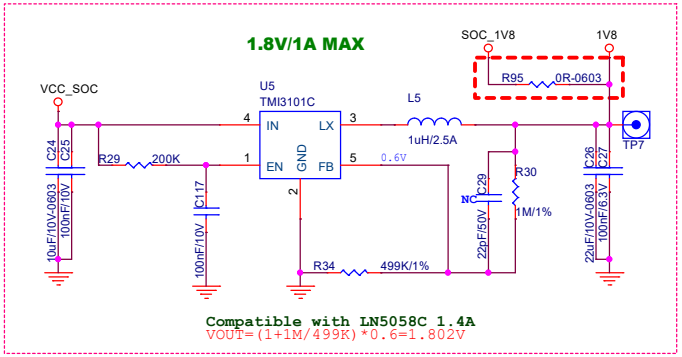

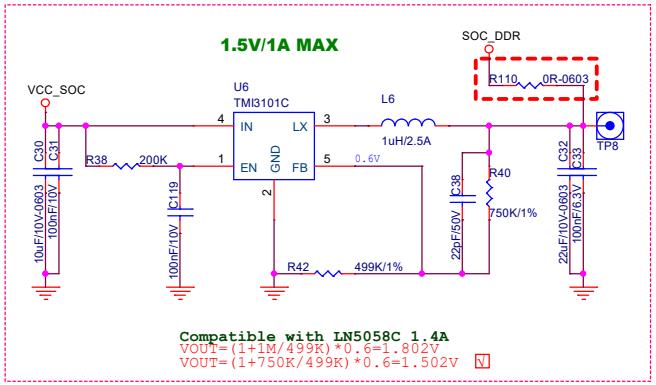

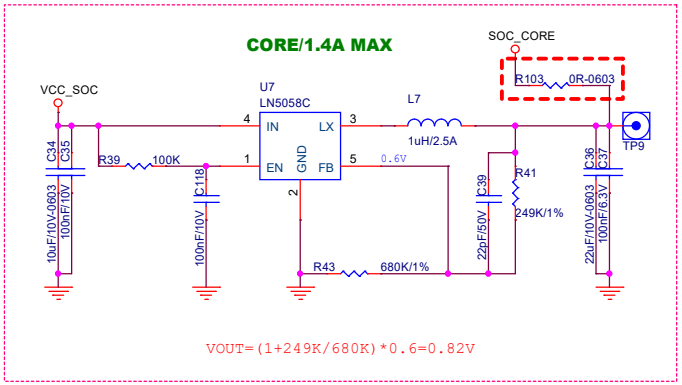

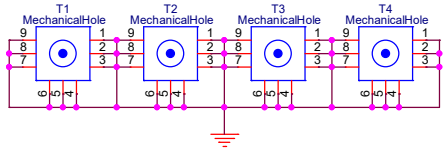

Note: The jumper in [- - - - - -] is used for measuring power consumption and can be removed in the product board.

Power Up Sequence:SOC_CORE->SOC_3V3->SOC_1V8(SOC_DDR)
Power-On Time Is Less Than 5ms

<Variant Name>

INGENIC SEMICONDUCTOR CO.,LTD		
Title: RD_T23_INDUS		
Size: A3	Page Name: PAGE04_POWER-SUPPLY	Rev: V1.1
Date: Monday, March 18, 2024	Sheet 4 of 12	

T23_SYS_APeripheral

1.MIPI Differential input impedance 100 Ohm ±10%
2.MIPI Differential pair equal length <100mil
3.MIPI Differential pair P/N equal length <10mil

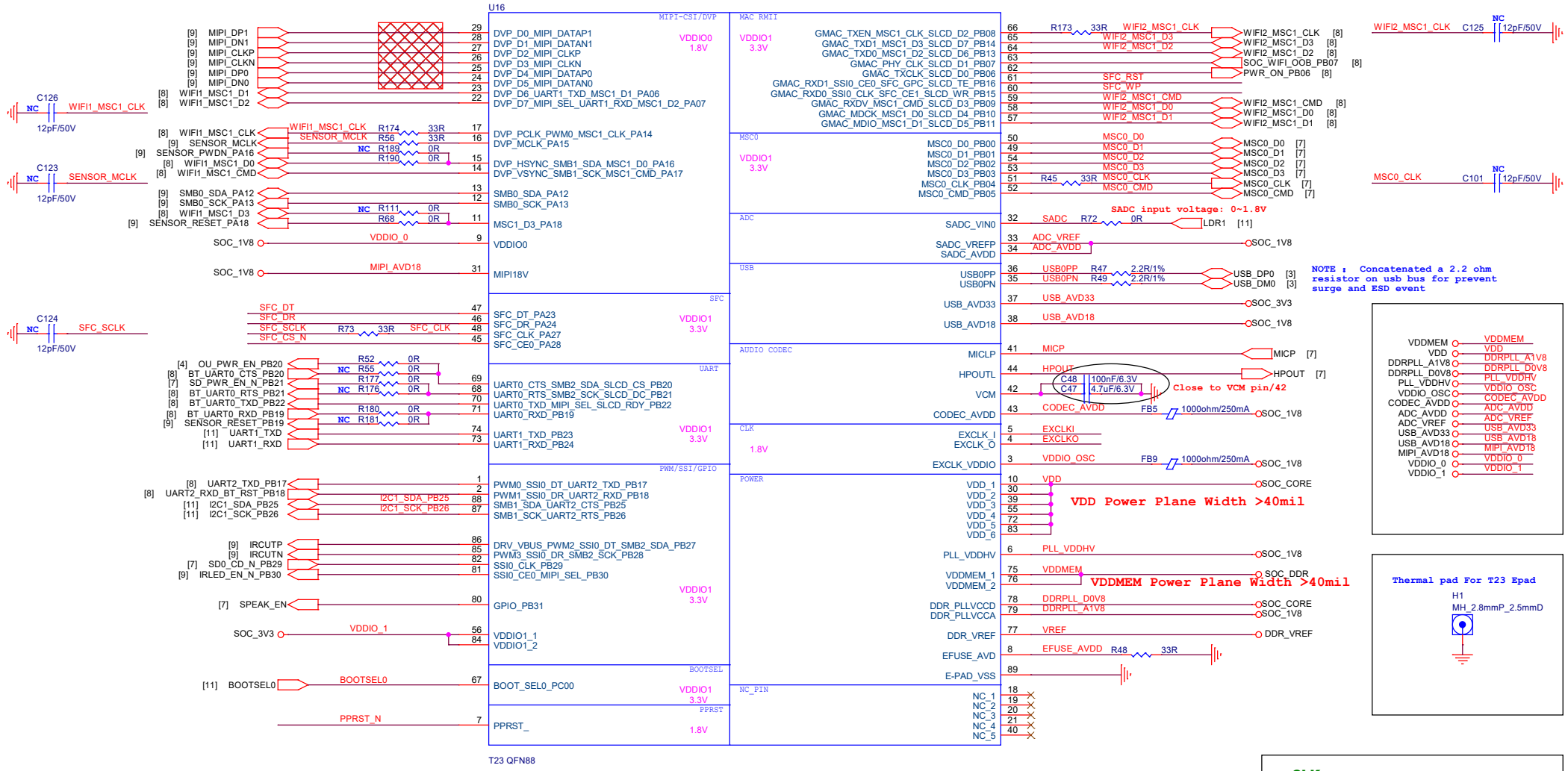

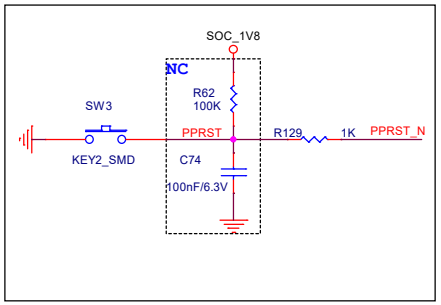

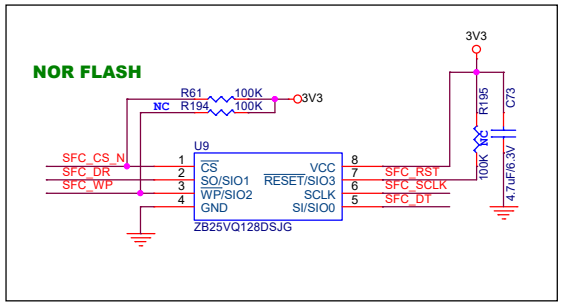

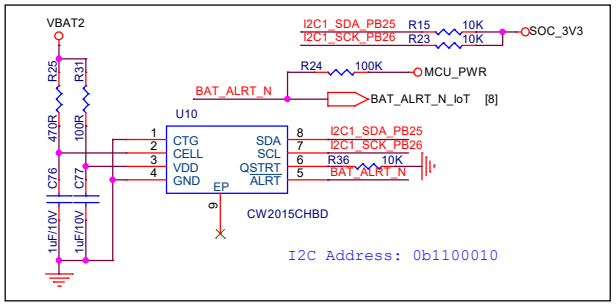

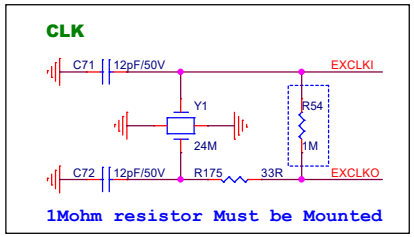

<Variant Name>

INGENIC SEMICONDUCTOR CO.,LTD		
Title: RD_T23_INDUS		
Size: A3	Page Name: PAGE05_T23_SYS_APeripheral	Rev: V1.1
Date: Monday, March 18, 2024	Sheet 5 of 12	

T23-Filter-Capacitor

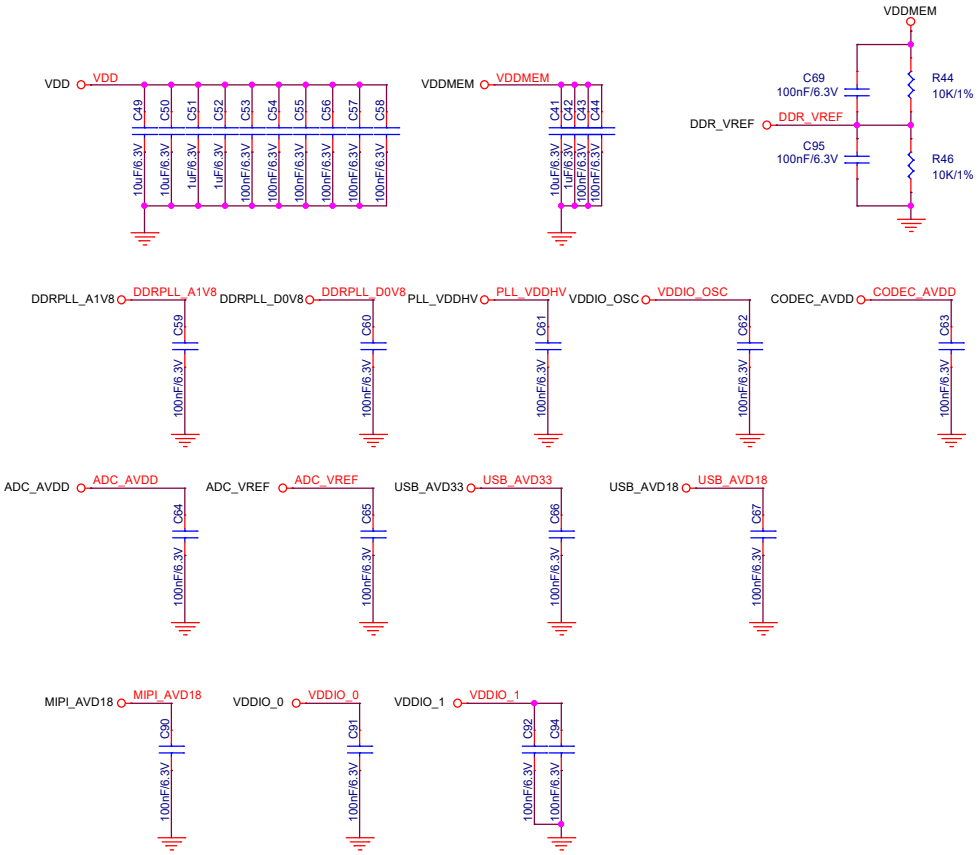

<Variant Name>

INGENIC SEMICONDUCTOR CO.,LTD		
Title: RD_T23_INDUS		
Size: A3	Page Name: PAGE06_T23-Filter-Capacitor	Rev: V1.1
Date: Monday, March 18, 2024	Sheet 6 of 12	

SD_AUDIO

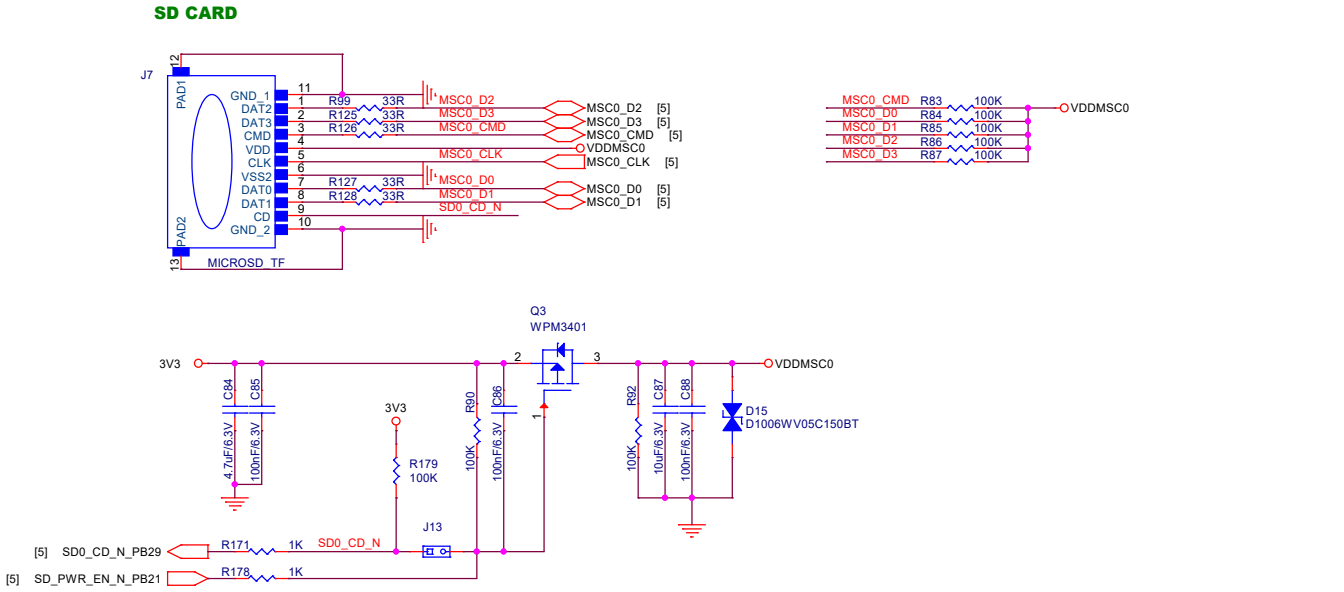

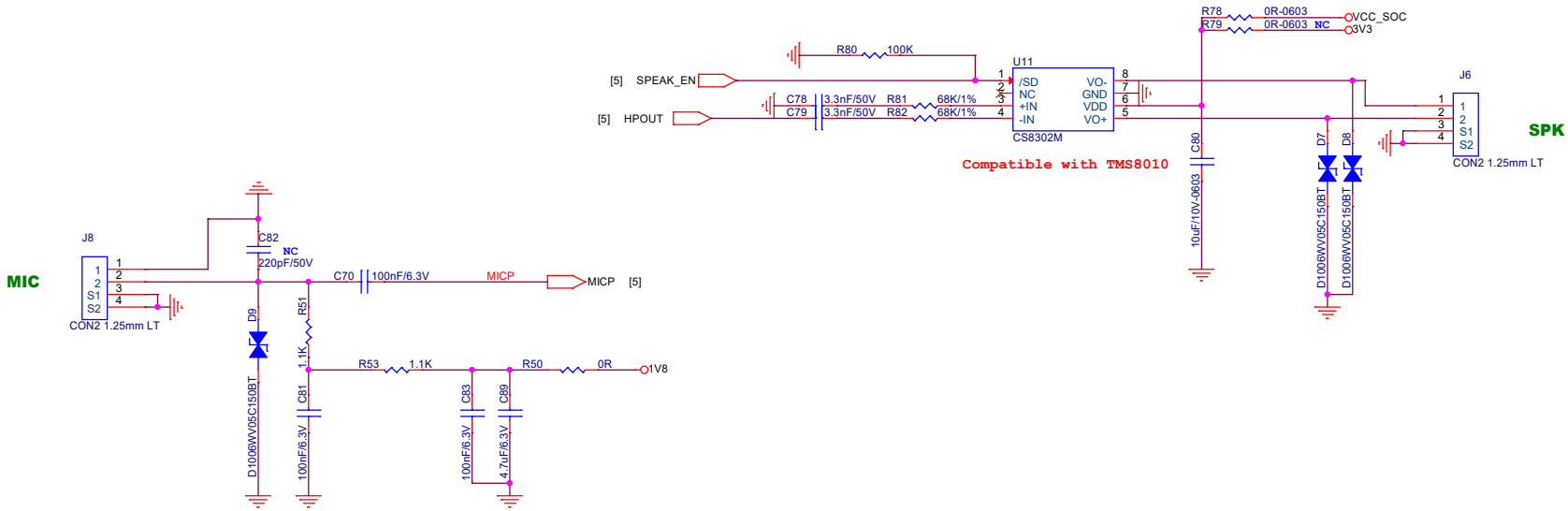

<Variant Name>

INGENIC SEMICONDUCTOR CO.,LTD		
Title: RD_T23_INDUS		
Size: A3	Page Name: PAGE07_SD_AUDIO	Rev: V1.1
Date: Monday, March 18, 2024	Sheet 7 of 12	

WIFI_Module

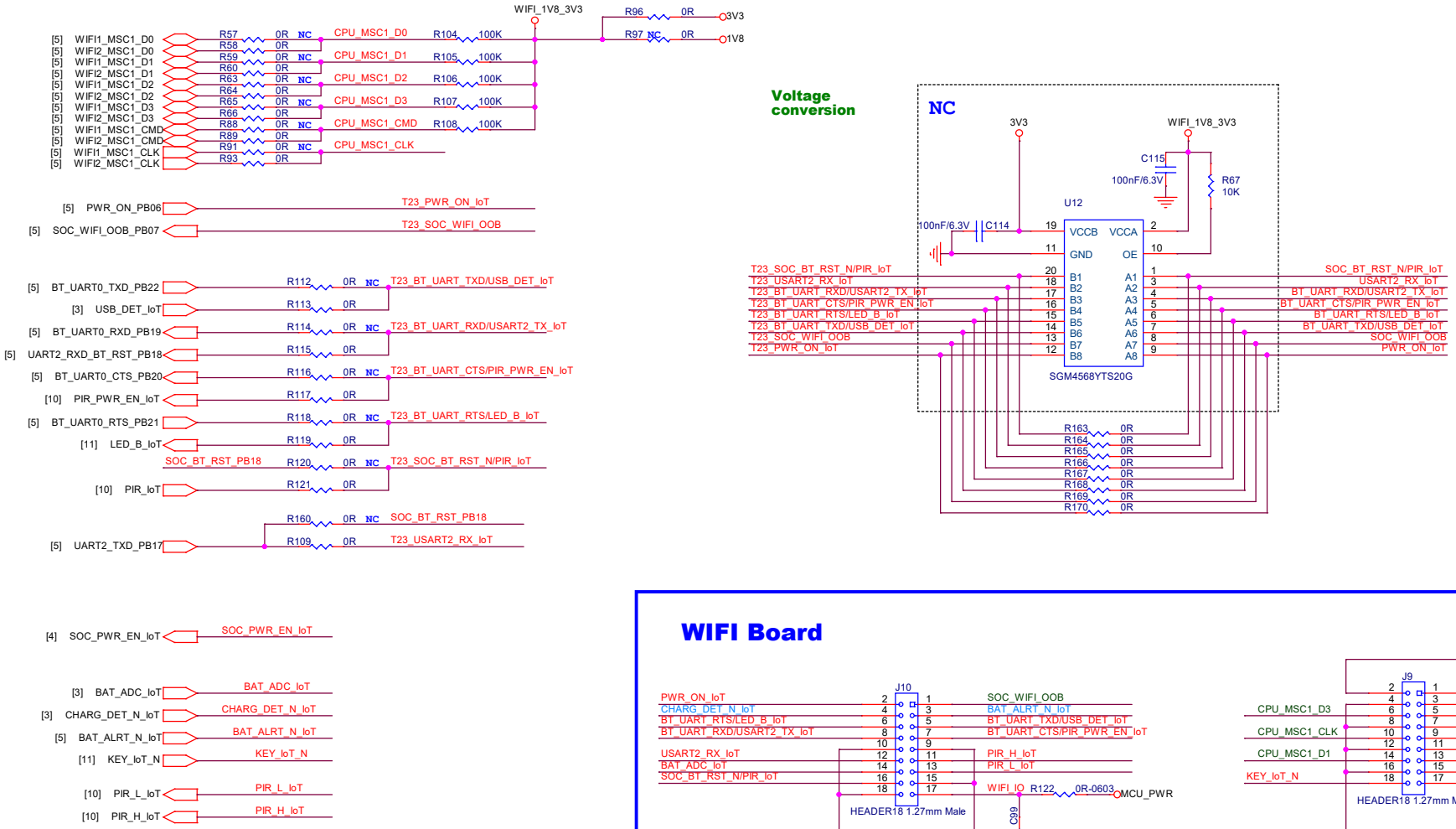

WIFI Board

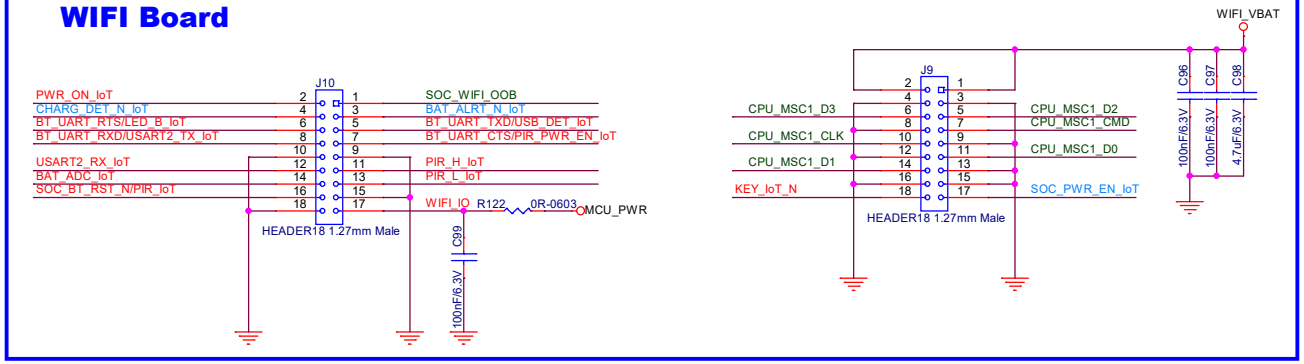

<Variant Name>

INGENIC SEMICONDUCTOR CO.,LTD		
Title: RD_T23_INDUS		
Size: A3	Page Name: PAGE08_WIFI_Module	Rev: V1.1
Date: Monday, March 18, 2024	Sheet 8 of 12	

SENSOR_IRLED

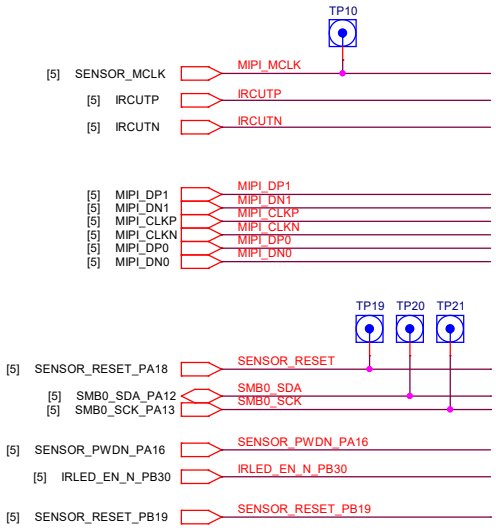

MIPI

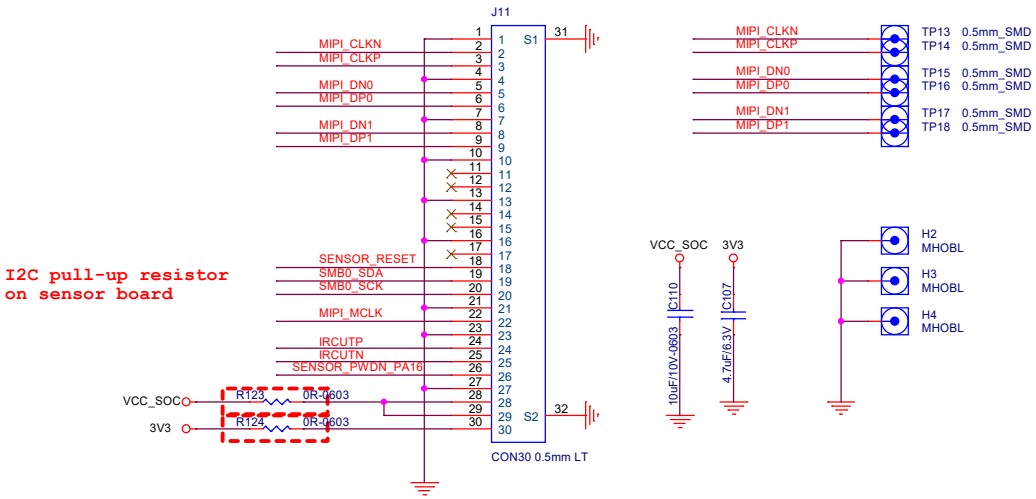

I2C pull-up resistor on sensor board

Note: The 0Ω resistance in [ ] is used for measuring power consumption and can be removed in the product board.

NC

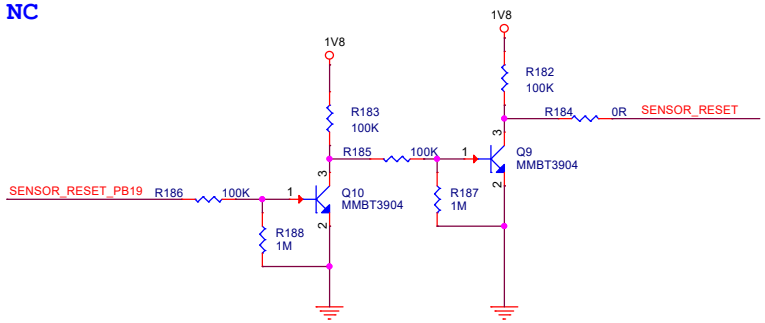

When GPIO_PA18 is multiplexed to MSC1_D3, select GPIO_PB19 to control SENSOR_RESET

IRLED

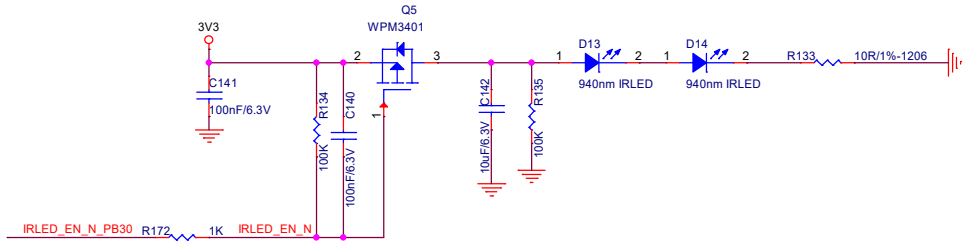

<Variant Name>

INGENIC SEMICONDUCTOR CO.,LTD		
Title: RD_T23_INDUS		
Size: A3	Page Name: PAGE09_SENSOR_IRLED	Rev: V1.1
Date: Monday, March 18, 2024	Sheet 9 of 12	

PIR

PIR Power

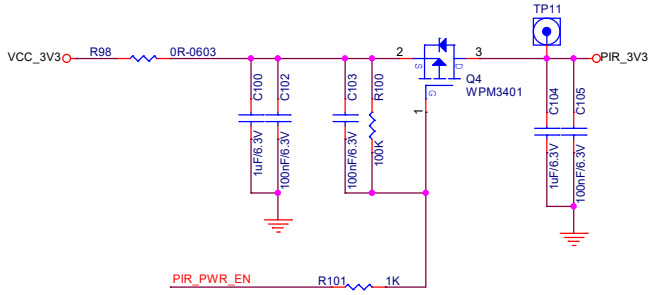

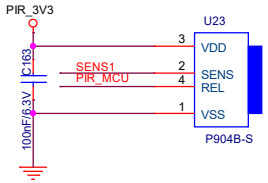

Digital PIR

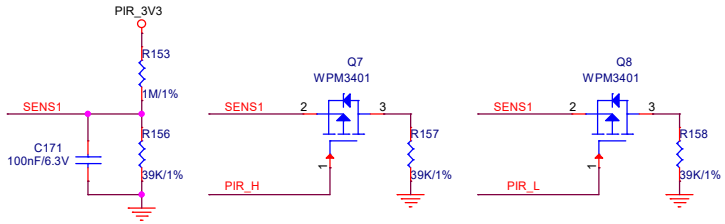

PIR_L/H: MCU Output, sensitivity can be adjusted dynamically.
The voltage dividing resistance (R153 R156)can be adjusted according to the demand.
Optional Features

<Variant Name>

INGENIC SEMICONDUCTOR CO.,LTD		
Title: RD_T23_INDUS		
Size: A3	Page Name: PAGE10_PIR	Rev: V1.1
Date: Monday, March 18, 2024	Sheet 10 of 12	

UART_BOOT_LDR_RTC_LED

DEBUG UART

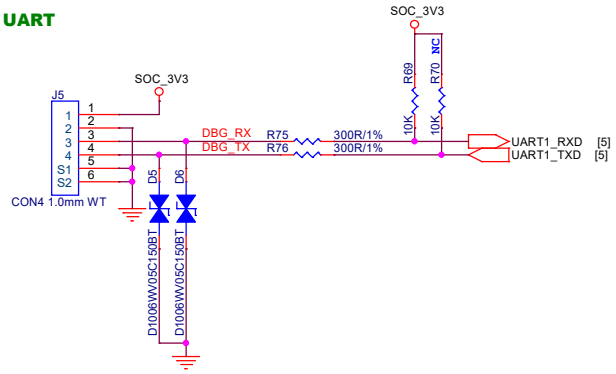

BOOT

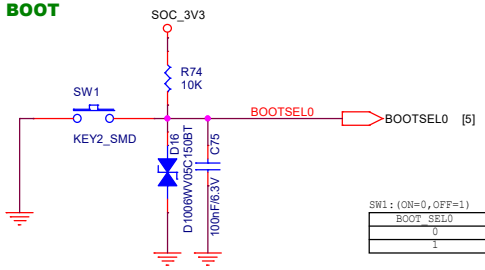

SW1:(ON=0,OFF=1)

BOOT_SEL0	BOOT FROM
0	SD card : MSC0
1	SFC : SPI0/SSI CE0

LDR

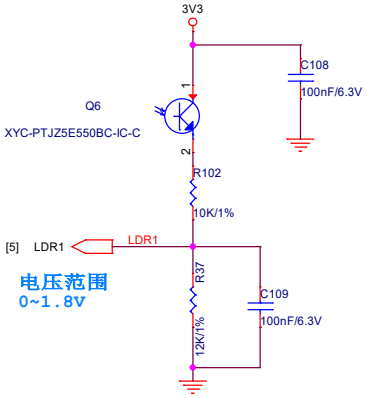

The resistance value is adjusted according to the photodiode

KEY

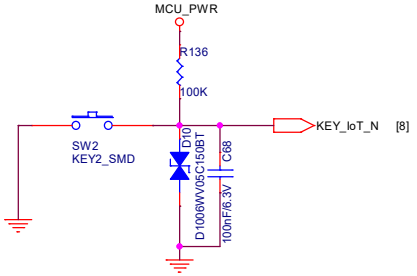

LED

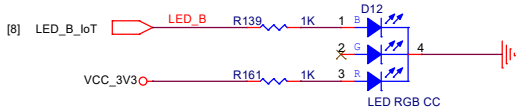

EXT RTC

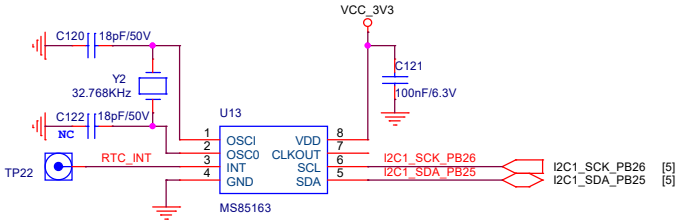

Please NC R161 when testing power consumption

<Variant Name>

INGENIC SEMICONDUCTOR CO.,LTD		
Title: RD_T23_INDUS		
Size: A3	Page Name: PAGE11_UART_BOOT_LDR_RTC_LED	Rev: V1.1
Date: Monday, March 18, 2024	Sheet 11 of 12	

Date	Revision	Change
Jun 14 2023	Rev1.0	1. First Revision
Mar 18 2024	Rev1.1	1.Replace DCDC 2.Delete APIR